Grid Strength Assessment and Planning Tool (GSAP) for IBR Dominated Areas

30th Mar 2026

Priyam Jain
Chief Manager (System Studies)
NLDC, GRID-INDIA
Email: priyam.jain@grid-india.in
priyamjain123@gmail.com

Contents

1. **Literature Survey on Short Circuit Ratio (SCR) metrics** (slides 3 – 9)

2. **Overview of the Grid Strength Assessment and Planning Tool** (slides 10 - 35)

   a) **SCR** Module - Base and Contingency Scenarios (slides 12 - 16)
      - Automated Work Flow
      - Input File Format
      - Output Results – 23 Bus Test System

   b) **SCR-IF** Module - Base and Contingency Scenarios (slides 17 - 27)
      - Automated Work Flow
      - Input File Format
      - Perturbation Modes: Fixed 'Q' versus Adaptive 'Q' mode and physical interpretation
      - Sanity Checks
      - Results Comparison and Interpretation - 23 Bus Test System

   c) **Optimal Planning Module** (**SynCONs / GFM** based on **SCR or SCRIF** metric) (slides 28 - 35)
      - Automated Work Flow
      - Input File Format – SynCON or GFM Candidates
      - Options – SCR or SCRIF Threshold
      - Screening of Candidates, Complete Optimization
      - Results and Interpretation - 23 Bus Test System

3. **All India System Results (Station Names Masked)** (slides 36 - 49)

Short Circuit Ratio (SCR) Metrics

Back to Contents

System Strength Basics

If the Grid is...	Then Voltage Sensitivity is...	Result
Strong (High Strength)	**Low**	The voltage is **"stiff".** Large changes in active or reactive power result in minimal voltage fluctuations.
Weak (Low Strength)	**High**	The voltage is **"sensitive".** Small changes in active or reactive power result in significant voltage swings.

1. **System Strength** is:
   - Represented by **"Short Circuit MVA"** or **"Short Circuit Ratio (SCR)"**
   - Dependent on number of Synchronous Generators in the vicinity
2. Pockets far away from Synchronous Generators have **low system strength**
3. In weak pockets, high sensitivity can lead to voltage instability, causing control systems to oscillate

$$Fault\ MVA = \frac{S_{base}}{Z_{th,p.u.}}$$

$$SCR = \frac{Short\ Circuit\ MVA}{IBR_{MW}}$$

Short Circuit Ratio - Definitions

1. **IEEE 2800-2022 Std. –** SCR is defined as the ratio between short-circuit apparent power (SCMVA) from a 3LG fault at a given location in the power system to the rating (in MW) of the IBR connected to that location.

$$SCR_{PoI} = \frac{SCMVA_{POI}}{MW_{IBR}}$$

Where **SCMVA$_{POI}$** is the short-circuit MVA level at the POI **without the current contribution of the inverter-based resource.**

2. **National Grid ESO -** SCR is traditionally used as the primary index for assessment of the system strength of the connection point **when considering a single inverter-based resource** connecting to the power system. It is defined as the ratio of the short-circuit MVA capacity at the busbar in the existing network **before the connection of the new generation source** to the rated megawatt value of the new connected source.

3. **NERC -** SCR is defined as the ratio between short circuit apparent power (SCMVA) from a 3LG fault at a given location in the power system to the rating of the inverter-based resource connected to that location.

$$SCR_{PoI} = \frac{SCMVA_{POI}}{MW_{VER}}$$

Where **SCMVA$_{POI}$** is the short circuit MVA level at the POI **without the current contribution of the inverter-based resource**, and **MW$_{VER}$** is the nominal power rating of the inverter-based resource being connected at the POI.

4. **CIGRE (TB-671: Connection of wind farms to weak AC networks) -** The Short Circuit Ratio (SCR), the ratio of the short circuit power at a given location in the network to the rating of the generator connected to that location.

Internationally recognized deficiencies in SCR metric for IBR dominated areas

- SCR metric is most appropriate when considering **a single inverter-based resource operating into a relatively conventional power system**
  - Does not account for the presence of other inverter-based resources or power electronic-based equipment electrically close to the POI under study

NERC

- **SCR cannot be easily applied to understand the strength of a grid when multiple inverter-based resources are connected electrically close.** More specifically, the use of SCR to estimate system strength for an inverter-based resource connected close to other inverter-based resources can lead to overly optimistic results. Several methods have been proposed to estimate system strength for groups of inverter-based resources connected electrically close.

National Grid - ESO

- Traditional SCR does not account sufficiently for the presence of nearby inverter-based resources or power electronic-based equipment. Additional SCR-based metrics have been developed by industry to address the presence of multiple inverter-based resources.

CIGRE TB – 671 (Connection of wind farms to weak AC networks)

- It sometimes happens that several WPPs are located adjacent to each other, or even sometimes connected to the same connection point. This makes it imperative to appreciate the impact of all neighboring WPPs. The two aspects addressed above are difficult to account for using the conventional calculation method for the SCR.

IEEE Std. 2800-2022

- **SCR does not account for the presence of other inverter-based resources or power electronic-based equipment electrically close to the POI under study.**

Internationally recommended short circuit metrics for IBR dominated areas (1/3)

Metric		Simple calculation using short-circuit program	Accounts for nearby inverter-based equipment	Provides common metric across a larger group of IBR	Accounts for weak electrical coupling between plants within larger groups	Considers non-active power inverter capacity	Able to consider individual sub-plants within larger groups
SCR	**Short-circuit ratio**	Yes	No	No	No	No	No
CSCR	**Composite SCR**	Partial	Yes	Yes	No	No	No
WSCR	**Weighted SCR**	Partial	Yes	Yes	Partial	No	No
SCRIF	**Multi-infeed SCR**	No	**Yes**	N/A	**Yes**	**Yes**	**Yes**

Source: *IEEE 2800-2022 Standard, IEEE Standard for Interconnection and Interoperability of Inverter -Based Resources (IBRs) Interconnecting with Associated Transmission Electric Power Systems*

SCRIF is the best available metric to capture impact of nearby IBRs on system strength !!

Internationally recommended short circuit metrics for IBR dominated areas (2/3)

SCR with Interaction Factors (SCRIF)

- When multiple inverter-based resources are located very close to each other, they share the grid strength and short circuit level; hence, the grid strength is actually much lower than the overall short circuit level calculated at that bus or buses.

- SCRIF metric proposed to capture the change in bus voltage at one bus corresponding resulting from a change in bus voltage at another bus.

- Captures the voltage sensitivity between inverter-based resources as a screening tool for potential controls issues by using inverter-based resource interaction factors, as follows:

- Electrically close inverter-based resource buses have a relatively higher Interaction Factor (IF) than inverter-based resource buses that are electrically separated.

$$\boldsymbol{SCRIF_i = \frac{SCMVA_i}{P_i + \sum_j IF_{ji} * P_j}}$$

- $\boldsymbol{SCMVA_i}$ is the short-circuit MVA at bus *"i"*
- $\boldsymbol{P_i}$ is the active power of the IBR plant at bus *"i"* for whom SCR is being calculated
- $\boldsymbol{P_j}$ is the active power of the IBR plant at bus *"j"* associated with interaction factor IF_{ji}
- $\boldsymbol{IF_{ji}}$ is the change in bus voltage at bus "i" (ΔVi) for a change in bus voltage at bus "j" (ΔVj) calculated as:

$$\boldsymbol{IF_{ji} = \frac{\Delta V_i}{\Delta V_j}}$$

Internationally recommended short circuit metrics for IBR dominated areas (3/3)

$$SCRIF_i = \frac{SCMVA_i}{P_i + \sum_j IF_{ji} * P_j}$$

$$IF_{ji} = \frac{\Delta V_i}{\Delta V_j}$$

SCR with Interaction Factors (SCRIF)

Sample Interaction Factor Matrix for a 4- Bus Test System

perturbation bus j →

observed bus i ↓

	Bus 1	Bus 2	Bus 3
Bus 1	**1.00** $\Delta V_1/\Delta V_1$	**0.68** $\Delta V_1/\Delta V_2$	**0.68** $\Delta V_1/\Delta V_3$
Bus 2	**0.51** $\Delta V_2/\Delta V_1$	**1.00** $\Delta V_2/\Delta V_2$	**0.34** $\Delta V_2/\Delta V_3$
Bus 3	**0.51** $\Delta V_3/\Delta V_1$	**0.34** $\Delta V_3/\Delta V_2$	**1.00** $\Delta V_3/\Delta V_3$

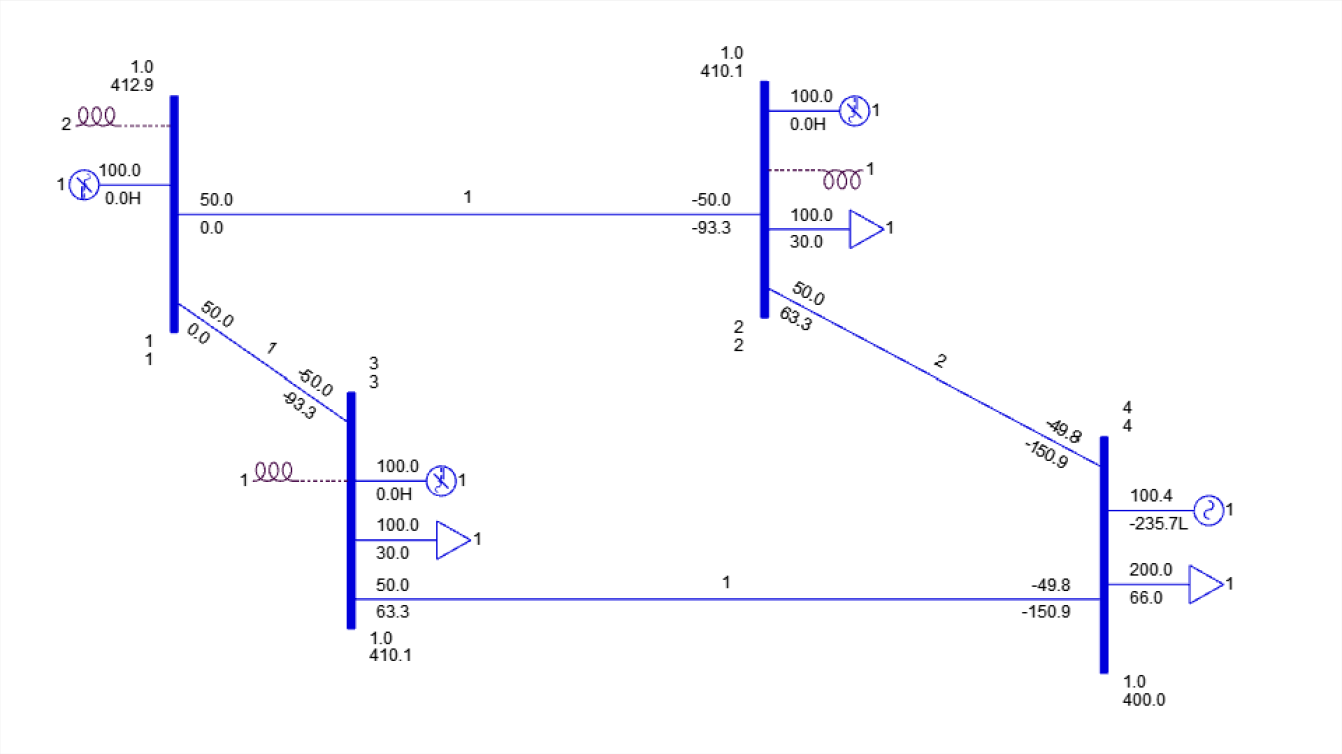

Bus-1, 2 and 3 are IBR injection buses

Overview of the Grid Strength Assessment and Planning Tool

Back to Contents

Grid Strength Assessment and Planning Tool

1. SCR Computation

- Computes Short Circuit MVA and Short Circuit Ratio (SCR) for specified buses
- Evaluates for both base case and specified contingency scenarios

2. SCR-IF Computation

SCR Module

Back to Contents

Grid Strength Assessment and Planning Tool – SCR Module

Work Flow – SCR Module

Specify Buses (for SCR computation) and Contingencies in the Input File

Specify Study Case Name (.sav) in the GSAP Tool Script

Run GSAP

Automated Work Flow

Solve Power Flow (FNSL)

Save Base Case Snapshot (Temporary File)

Fault Study

Compute and Save Base Case SCR for each Bus

For each contingency, Reload Base Snapshot

Trip Line/Transformer (Contingency)

Solve Post-Contingency PF

Compute and Append Contingency Case SCR in output file

$$SCR_{PoI} = \frac{SCMVA_{POI}}{MW_{IBR}}$$

Grid Strength Assessment and Planning Tool – 23 Bus Test System

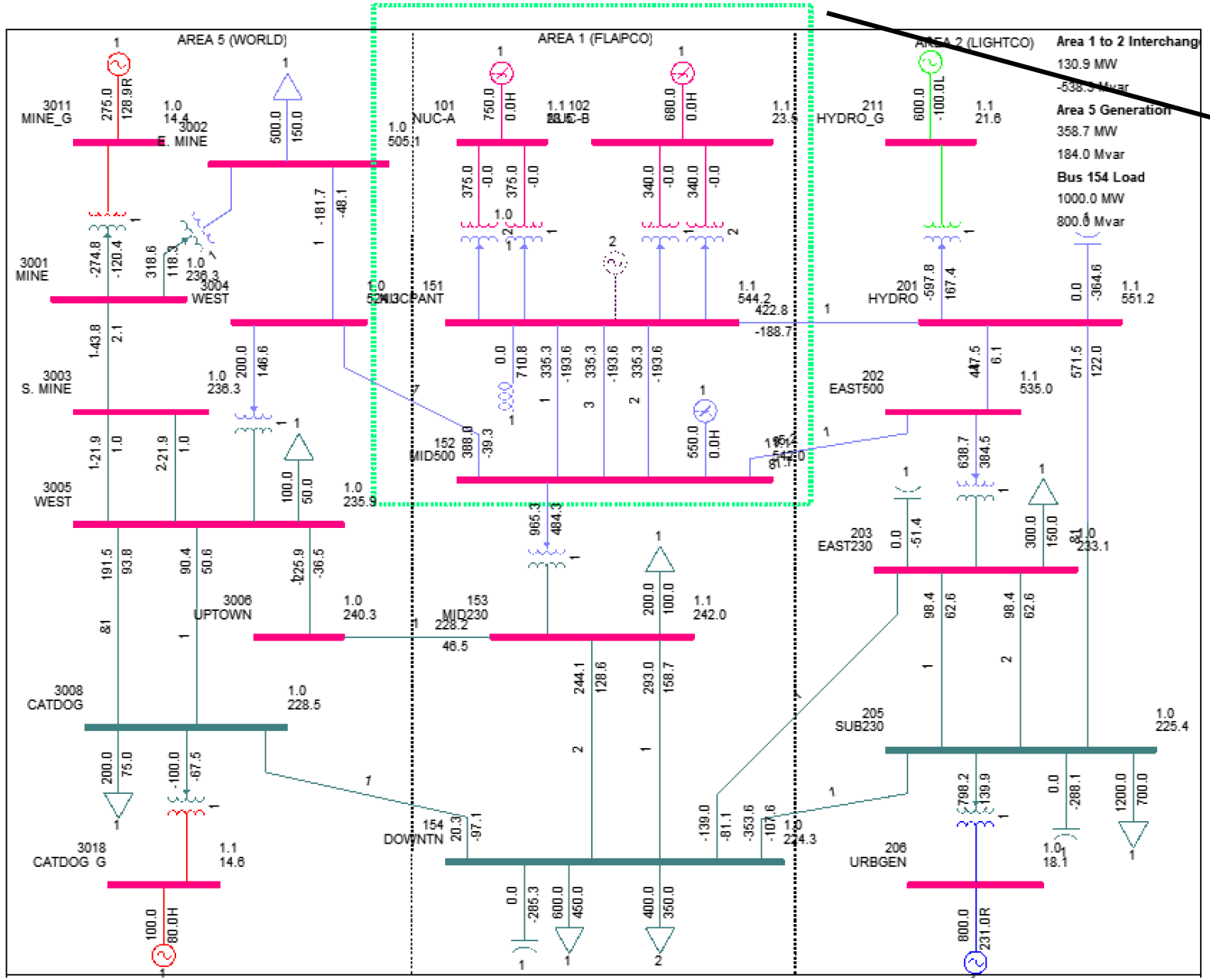

IBR Dominated Area

- Bus 101 (NUC-A)
- Bus 102 (NUC-B)
- Bus 152 (MID500)

Grid Strength Assessment and Planning Tool – 23 Bus Test System

Input File - SCR

Input File Format: Bus Data

Bus Number	Station Name	Voltage KV	Installed Capacity	Q_step_MVAr
101	NUC-A	21.6	800	50
102	NUC-B	21.6	700	50
152	MID500	500	1000	50

Sheet Name: Bus

Input File Format: Contingencies (Optional)

Sl No	Type	From Number	To Number	ID	Contingency
1	Transformer	101	151	1	21.6/500 kV NUC-A - NUCPANT ICT-1
2	Transformer	102	151	1	21.6/500 kV NUC-B - NUCPANT ICT-1
3	Line	152	202	1	500 kV MID500 - EAST500 LINE
4	Line	151	152	1	500 kV NUCPANT - MID500 LINE-1

Sheet Name: Contingency

Input File MVA Deduction (Optional)

Bus Number	Station Name	Voltage KV	MVA Capacity	Percentage Deduction
101	NUC-A	21.6	800	0
102	NUC-B	21.6	700	0
152	MID500	500	500	0

Sheet Name: MVA_Deduction

Code Snippet for specifying input file, base case and output file

```
CASE_PATH   = r"23_Bus_Test_System.sav"
INPUT_XLSX  = r"input_23_bus_test_system.xlsx"
OUTPUT_XLSX = r"SCR_SCRIF_results_23_bus_test_system.xlsx"
```

Grid Strength Assessment and Planning Tool – 23 Bus Test System

Output Results - SCR

Bus Number	Station Name	Voltage KV	Installed Capacity	Base Fault Level (MVA)	Base SCR	Case-1	Case-2	Case-3	Case-4
101	NUC-A	21.6	800	3358	4.20	3.42	4.20	4.14	3.96
102	NUC-B	21.6	700	3358	4.80	4.80	3.91	4.73	4.53
152	MID500	500	1000	5525	5.53	5.53	5.53	4.73	5.46

Sheet Name: SCR

Case	Contingencies
Case-1	21.6/500 kV NUC-A - NUCPANT ICT-1
Case-2	21.6/500 kV NUC-B - NUCPANT ICT-1
Case-3	500 kV MID500 - EAST500 LINE
Case-4	500 kV NUCPANT - MID500 LINE-1

SCR-IF Module

Back to Contents

Grid Strength Assessment and Planning Tool – SCR-IF Module

$$SCRIF_i = \frac{SCMVA_i}{P_i + \sum_j IF_{ji} * P_j}$$

$$IF_{ji} = \frac{\Delta V_i}{\Delta V_j}$$

Work Flow – SCR-IF Module

Specify Buses (for SCRIF computation) and Contingencies in the Input File

Specify Study Case Name (.sav) in the GSAP Tool Script

Run GSAP

Automated Work Flow

Solve Power Flow (FNSL)

Save Base Case Snapshot (Temporary File)

For computation of SCR-IF of bus 'i', add inject ΔQ at injection bus 'j' (fixed shunt Z1 as per input Q_step)

Re-solve Power Flow

|ΔVj| ≥ Specified Threshold

Yes → compute IF_ij row
No → adapt/skip

Repeat for all buses

Compute IF matrix ;
IF_ij = ΔVi / ΔVj (all 'i' and 'j')

Compute IF matrix ;
IF_ij = ΔVi / ΔVj (all 'i' and 'j')

Log ΔQ used for each bus for both Fixed 'Q' step and Adaptive Case

Save information of weak / skipped IF_ij columns also

Save Output File

Grid Strength Assessment and Planning Tool – SCR-IF Module

Perturbation Options

Fixed Q Step Mode

1. Inject the user-specified fixed ΔQ at each perturbation bus. if the requested Q-step is zero for a bus, that column is skipped and marked accordingly.

2. Compute the voltage response and check the perturbed bus voltage change, $|\Delta \boldsymbol{V}_j|$.

3. If $|\Delta \boldsymbol{V}_j|$ is below the threshold, the code does not increase ΔQ in fixed-skip mode; it marks that IF column as skipped.

4. This can happen when nearby voltage-controlling devices absorb the perturbation, so the voltage change at the perturbed bus is negligible or zero in some cases.

5. The results file records both the **requested ΔQ** and the **actual ΔQ used**, along with the status for each bus/case.

6. For skipped low-sensitivity cases, the status is recorded as **WEAK COLUMN SKIPPED.**

Adaptive Mode

1. Start with the user-defined initial ΔQ at each perturbation bus.

2. Measure the resulting voltage change at the perturbed bus, $|\Delta \boldsymbol{V}_j|$.

3. If $|\Delta \boldsymbol{V}_j| \geq$ threshold, use that column for IF calculation.

4. If $|\Delta \boldsymbol{V}_j| <$ threshold, increase ΔQ and re-run the perturbation for that bus.

5. Continue increasing ΔQ until $|\Delta \boldsymbol{V}_j|$ reaches the threshold, or ΔQ reaches max. specified value or the iteration limit is hit, or the case becomes unstable/blows up.

6. Final ΔQ actually used for the accepted column is written to the results file.

Grid Strength Assessment and Planning Tool – SCR-IF Module

Perturbation Options

Code Snippet for specifying SCR-IF Modes and Settings

```
# IF perturbation mode:
# - "adaptive": start with per-bus Q_step_MVAr and automatically increase ΔQ until |ΔVj| >= DVJ_MIN (current behavior)
# - "fixed_skip": use only the per-bus Q_step_MVAr once; if |ΔVj| < DVJ_MIN, skip the IF column (no adaptive growth)
IF_Q_MODE = "fixed_skip"
```

```
# Minimum |ΔVj| threshold for IF normalization (avoid dividing by tiny number)
DVJ_MIN = 1e-6

# Perturbation handling
ADAPTIVE_Q_MAX_MVAR = 500.0       # cap to avoid insane injection
ADAPTIVE_Q_GROWTH = 2.0            # growth factor/multiplier each retry
SKIP_WEAK_COLUMNS = True           # if still too small at max, skip that IF column
BASE_STATE_DRIFT_TOL = 1e-6        # max allowed |ΔV| between saved scenario and reloaded base state
```

Sanity Checks

Basic Sanity Checks

- The code flags **iteration limit exceeded** conditions instead of accepting an invalid solved state.
- It flags **case blown up / diverged / not converged** conditions when the perturbed case becomes numerically unstable.
- These cases are written to the results with an explicit **status message**, so bad runs are visible and not mixed with valid SCR-IF outputs.
- Columns affected by such failures are not used as normal valid IF columns.
- This prevents corrupted or non-physical perturbation results from propagating into SCR-IF.

Additional Sanity Checks

- **Weak perturbation check:** if the perturbation produces too small a local voltage change, the column is either adaptively retried or marked as skipped.
- **Maximum ΔQ cap:** In adaptive mode, ΔQ is increased only up to a configured upper limit to avoid unrealistically large injections.
- **Zero Q-step check:** if the requested Q-step is zero for a bus, that column is skipped and marked accordingly.

Grid Strength Assessment and Planning Tool – 23 Bus Test System

Input File - SCRIF

Input File Format: Bus Data

Bus Number	Station Name	Voltage KV	Installed Capacity	Q_step_MVAr
101	NUC-A	21.6	800	50
102	NUC-B	21.6	700	50
152	MID500	500	1000	50

Sheet Name: Bus

Input File Format: Contingencies (Optional)

Sl No	Type	From Number	To Number	ID	Contingency
1	Transformer	101	151	1	21.6/500 kV NUC-A - NUCPANT ICT-1
2	Transformer	102	151	1	21.6/500 kV NUC-B - NUCPANT ICT-1
3	Line	152	202	1	500 kV MID500 - EAST500 LINE
4	Line	151	152	1	500 kV NUCPANT - MID500 LINE-1

Sheet Name: Contingency

Input File MVA Deduction (Optional)

- Input file format is same as SCR module
- "Q-Step MVAR" specified against each bus decides the capacity of shunt to be added at that bus for IF computation
  - Positive value denotes that capacitor would be added; negative denotes addition of reactor
  - "Zero" or "Blank" column denotes that the particular bus would be skipped from IF computation for all other buses

Grid Strength Assessment and Planning Tool – 23 Bus Test System

Perturbation Options

Fixed Q Step Mode

Case	Bus Number	Requested ΔQ (MVAr)	Actual ΔQ Used (MVAr)	Status
BASE	101	50	50	OK
BASE	102	50	50	OK
BASE	152	50	50	**WEAK COLUMN SKIPPED**
Case-1	101	50	50	OK
Case-1	102	50	50	OK
Case-1	152	50	50	**WEAK COLUMN SKIPPED**
Case-2	101	50	50	OK
Case-2	102	50	50	OK
Case-2	152	50	50	**WEAK COLUMN SKIPPED**

Adaptive Q Step Mode

Case	Bus Number	Requested ΔQ (MVAr)	Actual ΔQ Used (MVAr)	Status
BASE	101	50	50	50
BASE	102	50	50	50
BASE	152	50	50	**400**
Case-1	101	50	50	50
Case-1	102	50	50	50
Case-1	152	50	50	**400**
Case-2	101	50	50	50
Case-2	102	50	50	50
Case-2	152	50	50	**400**

- When 200 MVAR STATCOM at Bus152 (MID500) is in service, 50 MVAR perturbation at that bus will not cause any change in voltage. Therefore, in Fixed 'Q' step mode, the column would be skipped in IF matrix computation.
- In adaptive 'Q' mode, the perturbation would be increased till $|\Delta V_j|$ crosses threshold.

Grid Strength Assessment and Planning Tool – 23 Bus Test System

Results SCRIF
Case-1: 200 MVAR STATCOM at Bus-152 (MID500) in Fixed 'Q' mode

Fixed 'Q Step' of 50 MVAR for 'IF' matrix computation

Bus Number	Station Name	Voltage KV	Installed Capacity	Base Fault Level (MVA)	Base SCRIF	Case-1 SCRIF	Case-2 SCRIF	Case-3 SCRIF	Case-4 SCRIF
101	NUC-A	21.6	800	3358	1.49	1.20	1.55	1.54	1.92
102	NUC-B	21.6	700	3358	1.51	1.58	1.22	1.55	1.96
152	MID500	500	1000	5525	3.27	3.39	3.38	2.69	3.42

Sheet Name: SCRIF

Case	Contingencies
Case-1	21.6/500 kV NUC-A - NUCPANT ICT-1
Case-2	21.6/500 kV NUC-B - NUCPANT ICT-1
Case-3	500 kV MID500 - EAST500 LINE
Case-4	500 kV NUCPANT - MID500 LINE-1

Case	Bus Number	SCRIF Denominator
BASE	101	2254
BASE	102	2231
BASE	152	1692
Case-1	101	2278
Case-1	102	2132
Case-1	152	1629
Case-2	101	2166
Case-2	102	2252
Case-2	152	1637
Case-3	101	2157
Case-3	102	2135
Case-3	152	1757
Case-4	101	1656
Case-4	102	1620
Case-4	152	1597

Sheet Name: SCRIF Denominator

Grid Strength Assessment and Planning Tool – 23 Bus Test System

Results SCRIF
Case-2: 200 MVAR STATCOM at Bus-152 (MID500) in Voltage Control mode

Fixed 'Q Step' of 50 MVAR for 'IF' matrix computation

Bus Number	Station Name	Voltage KV	Installed Capacity	Base Fault Level (MVA)	Base SCRIF	Case-1 SCRIF	Case-2 SCRIF	Case-3 SCRIF	Case-4 SCRIF
101	NUC-A	21.6	800	3358	2.71	2.20	3.00	2.65	1.41
102	NUC-B	21.6	700	3358	2.80	3.15	2.27	2.73	1.43
152	MID500	500	1000	5525	5.53	5.53	5.53	4.73	3.38

Sheet Name: SCRIF

Case	Contingencies
Case-1	21.6/500 kV NUC-A - NUCPANT ICT-1
Case-2	21.6/500 kV NUC-B - NUCPANT ICT-1
Case-3	500 kV MID500 - EAST500 LINE
Case-4	500 kV NUCPANT - MID500 LINE-1

Case	Bus Number	SCRIF Denominator
BASE	101	1238
BASE	102	1200
BASE	152	1000
Case-1	101	1243
Case-1	102	1065
Case-1	152	1000
Case-2	101	1119
Case-2	102	1204
Case-2	152	1000
Case-3	101	1249
Case-3	102	1213
Case-3	152	1000
Case-4	101	2241
Case-4	102	2220
Case-4	152	1614

Sheet Name: SCRIF Denominator

Grid Strength Assessment and Planning Tool – 23 Bus Test System

Results SCRIF
Case-3: 200 MVAR STATCOM at Bus-152 (MID500) in Voltage Control mode

Adaptive 'Q Step' for 'IF' matrix computation

Bus Number	Station Name	Voltage KV	Installed Capacity	Base Fault Level (MVA)	Base SCRIF	Case-1 SCRIF	Case-2 SCRIF	Case-3 SCRIF	Case-4 SCRIF
101	NUC-A	21.6	800	3358	1.56	1.27	1.65	1.61	1.41
102	NUC-B	21.6	700	3358	1.59	1.70	1.29	1.64	1.43
152	MID500	500	1000	5525	5.53	5.53	5.53	4.73	3.38

Sheet Name: SCRIF

Case	Contingencies
Case-1	21.6/500 kV NUC-A - NUCPANT ICT-1
Case-2	21.6/500 kV NUC-B - NUCPANT ICT-1
Case-3	500 kV MID500 - EAST500 LINE
Case-4	500 kV NUCPANT - MID500 LINE-1

Case	Bus Number	SCRIF Denominator
BASE	101	2154
BASE	102	2116
BASE	152	1000
Case-1	101	2163
Case-1	102	1979
Case-1	152	1000
Case-2	101	2032
Case-2	102	2122
Case-2	152	1000
Case-3	101	2053
Case-3	102	2017
Case-3	152	1000
Case-4	101	2241
Case-4	102	2220
Case-4	152	1614

Sheet Name: SCRIF Denominator

Grid Strength Assessment and Planning Tool – 23 Bus Test System

Results Comparison – Impact of Switching on 200 MVAR STATCOM at Bus-152 (MID500)

Station	Bus Voltage (kV)	Base Case SCR-IF Values		
		Case-1: Fixed 'Q' Perturbation + STATCOM at Bus-152 (MID500) in Fixed 'Q' mode (Q step = 50 MVAR)	Case-1: Fixed 'Q' Perturbation + STATCOM at Bus-152 (MID500) in Voltage Control mode (Q step = 50 MVAR)	Case-3: Adaptive 'Q' Perturbation + STATCOM at Bus-152 (MID500) in Voltage Control mode (Q step = 50 MVAR)
NUC-A	21.6	1.49	2.71	1.56
NUC-B	21.6	1.51	2.80	1.59
MID500	500	3.27	5.53	5.53

Case	Bus Number	Requested ΔQ (MVAr)	Actual ΔQ Used (MVAr)		
			Case-1: Fixed 'Q' Perturbation + STATCOM at Bus-152 (MID500) in Fixed 'Q' mode (Q step = 50 MVAR)	Case-1: Fixed 'Q' Perturbation + STATCOM at Bus-152 (MID500) in Voltage Control mode (Q step = 50 MVAR)	Case-3: Adaptive 'Q' Perturbation + STATCOM at Bus-152 (MID500) in Voltage Control mode (Q step = 50 MVAR)
BASE	101	50	50	50	50
BASE	102	50	50	50	50
BASE	152	50	**50**	**50 (No perturbation in voltage observed - Column Skipped)**	**400 (Adaptive change till perturbation is observed)**

SynCON/GFM Optimal Placement Module

Back to Contents

Grid Strength Assessment and Planning Tool – SynCON/GFM Placement Module

Work Flow – Optimization / Planning Module

Specify SynCON or GFM Candidates in Input File. Other inputs are same as SCR Module.

↓

Specify Study Case Name (.sav) in the GSAP Tool Script

↓

Choose among SCR or SCRIF threshold to be met after Optimization

↓

Run GSAP

→

Automated Work Flow

Solve Power Flow (FNSL)

↓

Save Base Case Snapshot (Temporary File)

↓

Add each SynCON candidate one by one and check the net deficit reduction of SCR or SCRIF

↓

Rank top 'N' candidates on the basis of net deficit reduction per unit cost

Default 'N' = 10

↓

Select top 'N' screened candidates + candidates at the SCR or SCR-IF deficit buses for detailed study

→

List 2^N possible combinations / subsets

↑

For each subset: add SynCONs in base case + solve + compute SCR or SCRIF metric

↑

If the subset is feasible → update as best scenario if cost is also lowest

↑

Validation: Reinstall optimal scenario and verify results

↑

Save Detailed Output Results

Candidate Initial Screening

With N candidate buses, the total number of possible subsets (install v/s not-install) is 2^n. Each evaluation requires a full PSSE solve + fault study.

Example: 20 candidates → 2^{20} = 1,048,576 subsets

Not practical to evaluate all combinations. Screening reduces the search space to a manageable shortlist before exact enumeration.

Optimization – Why Screening? The 2^n Problem

Computation Efficiency

With N candidate buses, the total number of possible subsets (install v/s not-install) is 2^n. Each evaluation requires a full PSSE solve + Fault study.

Example: 20 candidates → 2^{20} = 1,048,576 subsets

Not practical to evaluate all combinations. Screening reduces the search space to a manageable shortlist before exact enumeration.

'n' candidates → 2^n Subsets

5 → 31
10 → 1,023
16 → 65,535
20 → 1,048,575

Option to Select between Screening + Optimization versus Exact Full Optimization

Screening Priority Sequence

Feasible alone → highest deficit reduction → highest pass count → lowest cost → first encountered if still tied

Where:

- **Feasible alone** = candidate by itself makes all monitored buses pass
- **Deficit reduction** = largest reduction in total system deficit
- **Pass count** = candidate makes more buses pass
- **Cost** = lower is better
- if everything is still tied, the one screened first in the screening order remains ahead

Grid Strength Assessment and Planning Tool – SynCON/GFM Placement Module

Option to Select between:

- SCR or SCR-IF Target
- Screening + Optimization versus Exact Full Optimization

Code Snippet for specifying Optimization Module Settings

```
# Optimization target
# "SCR" or "SCRIF"
OPT_TARGET_METRIC = "SCR"
OPT_MIN_THRESHOLD = 5.0

# Optimization mode:
# "FAST_HYBRID" -> actual one-by-one screening + exact search on shortlist
# "EXACT_FULL"  -> exact search on all candidates
OPTIMIZATION_MODE = "FAST_HYBRID"
```

Grid Strength Assessment and Planning Tool – SynCON/GFM Placement Module

Recording of useful parameters and metrics in output results

Summary	**Results_Summary**	High-level outcome: mode, threshold, selection, validation status
Metrics	**SCR**	Per-bus fault level (MVA) and Short Circuit Ratio (base & contingencies)
Metrics	**SCRIF**	Per-bus impedance-weighted SCR (base & contingencies)
IF Matrix	**ΔQ_Used**	Actual ΔQ injected per bus for IF computation (quality check)
Screening	**Base_TargetMetric_Check**	Bus-level pass/fail before optimization with deficit values
Screening	**SynCon_Screening**	All candidates ranked by deficit reduction (one-by-one screening)

Optimization	**SynCon_Shortlist**	Top-K candidates forwarded to exact enumeration stage
Optimization	**SynCon_Selected**	Optimal minimum-cost subset chosen by exact enumeration
Validation	**SynCon_Achieved**	Final metric per bus with selected SynCons installed
Validation	**SynCon_Validation**	Pass/fail and deficit after optimization (all must be 0)
Debug	**SynCon_Trace**	All enumerated subsets with cost, feasibility and benefit
Summary	**SynCon_Optimization**	Optimization metadata: count, cost, global benefit score

Input File Formats – SynCON / GFM Optimal Placement

Input File Format: Candidate Machines

Candidate	Candidate Bus	Cost	MBASE_MVA	QMAX_MVAr	QMIN_MVAr	Xsource_pu	Pgen	Pmax	Pmin	MachID
SC01	101	1	350	300	-300	0.25	0	0	0	Y1
SC02	102	1	350	300	-300	0.25	0	0	0	Y1
SC03	151	1	350	300	-300	0.25	0	0	0	Y1
SC04	152	1	350	300	-300	0.25	0	0	0	Y1

Sheet Name: SynCon

- Input file format for Bus Data is same as SCR module.
- Candidate SynCons / GFM devices are defined in the SynCon sheet of the same input Excel file. Each row is one candidate bus with user specified parameters.

Grid Strength Assessment and Planning Tool – 23 Bus Test System

Result of Optimal SynCON Placement for Minimum SCR Target of '5' at all specified buses

1/3	1/4	1	3/3	18.14
buses passing SCR Criteria before optimization	SynCons selected	portfolio cost	buses passing SCR Criteria after validation	global benefit

Final Selected Candidates

	Candidate	Bus | Station Name	MBASE (MVA) | Qmax (MVAr) | Qmin (MVAr) | Xs (pu) | Cost
C1	SC02	102 – NUC-B	350 MVA | Qmax=300 | Qmin=-300 | Xs=0.250 | Cost=1.0

SCR IMPROVEMENT AFTER SYNCON (Base → With SynCon)				
Bus Number	**Station Name**	**Base SCR → With-SynCon SCR**	**Change**	**Status**
101	NUC-A	4.198 → 5.070	+0.873	✓ PASS
102	NUC-B	4.797 → 6.773	+1.976	✓ PASS
152	MID500	5.525 → 6.300	+0.775	✓ PASS

Final Selection Rule

Pick the lowest total cost. If tied: fewer units. If still tied: higher global benefit.

Grid Strength Assessment and Planning Tool – 23 Bus Test System

Result of Optimal SynCON Placement for Minimum SCRIF Target of '5' at all specified buses

0/3	1/4	1	3/3	17.39
buses passing SCR Criteria before optimization	SynCons selected	portfolio cost	buses passing SCR Criteria after validation	global benefit

Final Selected Candidates

	Candidate	Bus | Station Name	MBASE (MVA) | Qmax (MVAr) | Qmin (MVAr) | Xs (pu) | Cost
C1	SC03	151 – NUCPANT	350 MVA | Qmax=300 | Qmin=-300 | Xs=0.250 | Cost=1.0

Final Selection Rule

Pick the lowest total cost. If tied: fewer units. If still tied: higher global benefit.

SCRIF IMPROVEMENT AFTER SYNCON (Base → With SynCon)		
Bus Number	**Station Name**	**Base SCR → With-SynCon SCR | Change | Status**
101	NUC-A	1.490 → 5.148 | +3.658 | ✓ PASS
102	NUC-B	1.505 → 5.884 | +4.379 | ✓ PASS
152	MID500	3.266 → 6.365 | +3.098 | ✓ PASS

Similar optimization may also be applied to GFM in place of SynCON, or to a hybrid SynCON + GFM approach with different combinations of costs and size

All India Results

(Station Names Masked)

Back to Contents

Grid Strength Assessment and Planning Tool – All India Results (SCR)

Input File - SCR

Input File Format: Bus Data

Bus Number	Station Name	VoltageKV	Installed Capacity	Q_step_MVAr
132193	F-IIA	220	2490	25
132220	F-IIB	220	1370	25
134052	F-II	400	2606	25
132226	F-III	220	2659	25
132174	BH-PG	220	3580	25
132210	BH-IIA	220	2230	0
132225	BH-IIB	220	1065	25
134063	BH-IIA	400	4395	25
132194	BK-PG	220	935	0
134042	BK-PG	400	3575	25
132230	BK-II	220	2985	0
134059	BK-II	400	3873	25

Sheet Name: Bus

Input File Format: Contingencies (Optional)

Sl No	Type	FromNumber	ToNumber	ID	Contingency
1	Line	137004	137009	H1	765 kV BK - KH - ckt-I
2	Line	137004	117000	H1	765 kV BK - MG - ckt-I
3	Line	137004	137006	H1	765 kV BH-II - BK - ckt-I
4	Line	137004	137005	H1	765 kV BH - BK - ckt-I
5	Line	137008	137005	H1	765 kV BH - F-II - ckt-I
6	Line	137008	137006	H1	765 kV BH-II - F-II - ckt-I
7	Line	137006	137003	H1	765 kV BH-II - AJ - ckt-I
8	Line	137006	137010	H1	765 kV BH-II - SK-II - ckt-I
9	Line	134018	134017	T1	400 kV SG - BK - ckt-I
10	Line	134014	134017	Q1	400 kV BH-RS - BK-RS - ckt-I
11	Line	134042	134059	Q1	400 kV BK-PG - BK-II ckt-1

Sheet Name: Contingency

Code Snippet for specifying input file, base case and output file

```
CASE_PATH   = r"ALL India M-1 Basecase Mar'26 Solar-peak.sav"
INPUT_XLSX  = r"input_NR_with_SynCon.xlsx"
OUTPUT_XLSX = r"SCR_SCRIF_results_with_SynCon_Optimization_Latest.xlsx"
```

Grid Strength Assessment and Planning Tool – All India Results (SCR)

Output Results - SCR

Bus Number	Station Name	Voltage KV	Installed Capacity	Base Fault Level (MVA)	Base SCR	Case-1	Case-2	Case-3	Case-4	Case-5	Case-6	Case-7	Case-8	Case-9	Case-10	Case-11
132193	F-IIA	220	2490	12295	4.94	4.90	4.91	4.92	4.90	4.84	4.83	4.86	4.91	4.94	4.92	4.93
132220	F-IIB	220	1370	9958	7.27	7.22	7.24	7.24	7.22	7.15	7.15	7.18	7.24	7.27	7.25	7.26
134052	F-II	400	2606	12684	4.87	4.83	4.84	4.84	4.83	4.76	4.76	4.78	4.84	4.87	4.85	4.86
132226	F-III	220	2659	10420	3.92	3.90	3.91	3.91	3.90	3.88	3.87	3.88	3.91	3.92	3.91	3.92
132174	BH-PG	220	3580	14979	4.18	4.14	4.16	4.18	4.09	4.15	4.18	4.12	4.16	4.18	4.11	4.18
132210	BH-IIA	220	2230	11562	5.18	5.14	5.16	5.14	5.16	5.18	5.18	5.08	5.15	5.18	5.16	5.18
132225	BH-IIB	220	1065	8343	7.83	7.79	7.81	7.79	7.81	7.83	7.83	7.72	7.80	7.83	7.80	7.83
134063	BH-IIA	400	4395	26099	5.94	5.83	5.87	5.83	5.87	5.94	5.93	5.67	5.85	5.93	5.86	5.93
132194	BK-PG	220	935	7892	8.44	8.31	8.36	8.34	8.38	8.43	8.44	8.40	8.43	8.44	8.43	8.37
134042	BK-PG	400	3575	23070	6.45	6.18	6.28	6.23	6.31	6.43	6.45	6.36	6.43	6.45	6.44	6.29
132230	BK-II	220	2985	11332	3.80	3.76	3.76	3.75	3.77	3.79	3.80	3.78	3.79	3.80	3.79	3.34
134059	BK-II	400	3873	17031	4.40	4.33	4.34	4.32	4.35	4.39	4.40	4.36	4.39	4.40	4.39	3.64

Sheet Name: SCR

Case-1	765 kV BK - KH - ckt-I
Case-2	765 kV BK - MG - ckt-I
Case-3	765 kV BH-II - BK - ckt-I
Case-4	765 kV BH - BK - ckt-I
Case-5	765 kV BH - F-II - ckt-I
Case-6	765 kV BH-II - F-II - ckt-I
Case-7	765 kV BH-II - AJ - ckt-I

Case-8	765 kV BH-II - SK-II - ckt-I
Case-9	400 kV SG - BK - ckt-I
Case-10	400 kV BH-RS - BK-RS - ckt-I
Case-11	400 kV BK-PG - BK-II ckt-1

Grid Strength Assessment and Planning Tool – All India Results (SCRIF)

Input File Formats - SCRIF

Input File Format: Bus Data

Bus Number	Station Name	VoltageKV	Installed Capacity	Q_step_MVAr
132193	F-IIA	220	2490	25
132220	F-IIB	220	1370	25
134052	F-II	400	2606	25
132226	F-III	220	2659	25
132174	BH-PG	220	3580	25
132210	BH-IIA	220	2230	0
132225	BH-IIB	220	1065	25
134063	BH-IIA	400	4395	25
132194	BK-PG	220	935	0
134042	BK-PG	400	3575	25
132230	BK-II	220	2985	0
134059	BK-II	400	3873	25

Sheet Name: Bus

Input File Format: Contingencies (Optional)

Sl No	Type	FromNumber	ToNumber	ID	Contingency
1	Line	137004	137009	H1	765 kV BK - KH - ckt-I
2	Line	137004	117000	H1	765 kV BK - MG - ckt-I
3	Line	137004	137006	H1	765 kV BH-II - BK - ckt-I
4	Line	137004	137005	H1	765 kV BH - BK - ckt-I
5	Line	137008	137005	H1	765 kV BH - F-II - ckt-I
6	Line	137008	137006	H1	765 kV BH-II - F-II - ckt-I
7	Line	137006	137003	H1	765 kV BH-II - AJ - ckt-I
8	Line	137006	137010	H1	765 kV BH-II - SK-II - ckt-I
9	Line	134018	134017	T1	400 kV SG - BK - ckt-I
10	Line	134014	134017	Q1	400 kV BH-RS - BK-RS - ckt-I
11	Line	134042	134059	Q1	400 kV BK-PG - BK-II ckt-1

Sheet Name: Contingency

- Input file format is same as SCR module
- "Q-Step MVAR" specified against each bus decides the capacity of shunt to be added at that bus for IF computation
  - Positive value denotes that capacitor would be added; negative denotes addition of reactor
  - "Zero" or "Blank" column denotes that the particular bus would be skipped from IF computation for all other buses

Grid Strength Assessment and Planning Tool – All India Results (SCRIF)

Perturbation Options - SCRIF

Fixed Q Step Mode

Case	Bus Number	Requested ΔQ (MVAr)	Actual ΔQ Used (MVAr)	Status
BASE	132174	10	10	OK
BASE	132193	10	10	OK
BASE	132194	0	0	Q_STEP_ZERO_SKIPPED
BASE	132210	0	0	Q_STEP_ZERO_SKIPPED
BASE	132220	10	10	OK
BASE	132225	10	10	OK
BASE	132226	10	10	OK
BASE	132230	0	0	Q_STEP_ZERO_SKIPPED
BASE	132302	10	10	OK
BASE	134042	10	10	OK
BASE	134052	10	10	OK
BASE	134059	10	10	WEAK COLUMN SKIPPED

Adaptive Q Step Mode

Case	Bus Number	Requested ΔQ (MVAr)	Actual ΔQ Used (MVAr)	Status
BASE	132174	10	10	OK
BASE	132193	10	10	OK
BASE	132194	0	0	Q_STEP_ZERO_SKIPPED
BASE	132210	0	0	Q_STEP_ZERO_SKIPPED
BASE	132220	10	10	OK
BASE	132225	10	10	OK
BASE	132226	10	10	OK
BASE	132230	0	0	Q_STEP_ZERO_SKIPPED
BASE	132302	10	10	OK
BASE	134042	10	10	OK
BASE	134052	10	10	OK
BASE	134059	10	320	OK (ΔQ=320)

- When 300 MVAR STATCOM at BK-II is in service, 10 MVAR perturbation at that bus will not cause any change in voltage. Therefore, in Fixed 'Q' step mode, the column would be skipped in IF matrix computation.
- In adaptive 'Q' mode, the perturbation would be increased till $|\Delta V_j|$ crosses threshold.

Grid Strength Assessment and Planning Tool – All India Results (SCRIF)

Results SCRIF
Case-1: 300 MVAR STATCOM at BK-II in Fixed 'Q' mode

Fixed 'Q Step' of 10 MVAR for 'IF' matrix computation

Bus Number	Station Name	Voltage KV	Installed Capacity	Base Fault Level (MVA)	Base SCRIF	Case-1 SCRIF	Case-2 SCRIF	Case-3 SCRIF	Case-4 SCRIF	Case-5 SCRIF	Case-6 SCRIF	Case-7 SCRIF	Case-8 SCRIF	Case-9 SCRIF	Case-10 SCRIF	Case-11 SCRIF
132193	F-IIA	220	2490	12295	1.08	1.03	1.04	1.08	1.08	1.07	1.05	1.02	1.06	1.08	1.05	1.10
132220	F-IIB	220	1370	9958	0.91	0.87	0.88	0.91	0.91	0.91	0.89	0.86	0.89	0.91	0.89	0.93
134052	F-II	400	2606	12684	1.10	1.05	1.06	1.10	1.09	1.09	1.07	1.03	1.08	1.09	1.07	1.12
132226	F-III	220	2659	10420	1.35	1.30	1.31	1.35	1.35	1.35	1.33	1.29	1.33	1.34	1.32	1.37
132174	BH-PG	220	3580	14979	1.23	1.17	1.19	1.23	1.21	1.23	1.23	1.17	1.21	1.22	1.16	1.26
132210	BH-IIA	220	2230	11562	0.83	0.79	0.80	0.82	0.82	0.83	0.82	0.77	0.81	0.82	0.80	0.84
132225	BH-IIB	220	1065	8343	0.69	0.66	0.67	0.69	0.69	0.69	0.69	0.65	0.67	0.68	0.67	0.70
134063	BH-IIA	400	4395	26099	2.24	2.10	2.14	2.20	2.22	2.25	2.23	2.03	2.17	2.22	2.14	2.28
132194	BK-PG	220	935	7892	0.62	0.58	0.59	0.62	0.63	0.62	0.62	0.60	0.61	0.62	0.61	0.64
134042	BK-PG	400	3575	23070	1.99	1.80	1.85	1.93	2.00	2.00	1.99	1.89	1.96	1.98	1.94	2.04
132230	BK-II	220	2985	11332	0.74	0.71	0.71	0.74	0.75	0.74	0.74	0.72	0.73	0.74	0.73	0.67
134059	BK-II	400	3873	17031	1.41	1.32	1.33	1.39	1.42	1.41	1.40	1.35	1.39	1.40	1.38	1.22

Sheet Name: SCRIF

Case-1	765 kV BK - KH - ckt-I
Case-2	765 kV BK - MG - ckt-I
Case-3	765 kV BH-II - BK - ckt-I
Case-4	765 kV BH - BK - ckt-I
Case-5	765 kV BH - F-II - ckt-I
Case-6	765 kV BH-II - F-II - ckt-I
Case-7	765 kV BH-II - AJ - ckt-I

Case-8	765 kV BH-II - SK-II - ckt-I
Case-9	400 kV SG - BK - ckt-I
Case-10	400 kV BH-RS - BK-RS - ckt-I
Case-11	400 kV BK-PG - BK-II ckt-1

Grid Strength Assessment and Planning Tool – All India Results (SCRIF)

Results SCRIF
Case-2: 300 MVAR STATCOM at BK-II in 'Voltage Control' Mode

Fixed 'Q Step' of 10 MVAR for 'IF' matrix computation

Bus Number	Station Name	Voltage KV	Installed Capacity	Base Fault Level (MVA)	Base SCRIF	Case-1 SCRIF	Case-2 SCRIF	Case-3 SCRIF	Case-4 SCRIF	Case-5 SCRIF	Case-6 SCRIF	Case-7 SCRIF	Case-8 SCRIF	Case-9 SCRIF	Case-10 SCRIF	Case-11 SCRIF
132193	F-IIA	220	2490	12295	1.28	1.25	1.26	1.27	1.26	1.26	1.25	1.22	1.26	1.28	1.25	1.26
132220	F-IIB	220	1370	9958	1.09	1.06	1.08	1.09	1.07	1.08	1.07	1.04	1.07	1.09	1.07	1.07
134052	F-II	400	2606	12684	1.30	1.27	1.28	1.30	1.28	1.28	1.27	1.24	1.28	1.30	1.28	1.28
132226	F-III	220	2659	10420	1.54	1.51	1.52	1.53	1.52	1.53	1.52	1.49	1.52	1.54	1.52	1.52
132174	BH-PG	220	3580	14979	1.48	1.44	1.46	1.49	1.43	1.49	1.49	1.43	1.47	1.48	1.42	1.46
132210	BH-IIA	220	2230	11562	0.97	0.95	0.96	0.96	0.96	0.97	0.97	0.92	0.95	0.97	0.95	0.95
132225	BH-IIB	220	1065	8343	0.82	0.80	0.81	0.82	0.82	0.83	0.83	0.79	0.81	0.82	0.81	0.81
134063	BH-IIA	400	4395	26099	2.72	2.62	2.67	2.67	2.67	2.74	2.73	2.51	2.66	2.71	2.63	2.66
132194	BK-PG	220	935	7892	1.15	1.10	1.12	1.16	1.17	1.15	1.15	1.12	1.14	1.15	1.14	1.00
134042	BK-PG	400	3575	23070	3.94	3.67	3.79	3.93	3.97	3.96	3.95	3.81	3.90	3.93	3.89	3.30
132230	BK-II	220	2985	11332	3.79	3.75	3.76	3.75	3.77	3.79	3.79	3.78	3.79	3.79	3.79	3.34
134059	BK-II	400	3873	17031	4.40	4.33	4.34	4.32	4.35	4.39	4.40	4.36	4.39	4.40	4.39	3.64

Sheet Name: SCRIF

Case-1	765 kV BK - KH - ckt-I
Case-2	765 kV BK - MG - ckt-I
Case-3	765 kV BH-II - BK - ckt-I
Case-4	765 kV BH - BK - ckt-I
Case-5	765 kV BH - F-II - ckt-I
Case-6	765 kV BH-II - F-II - ckt-I
Case-7	765 kV BH-II - AJ - ckt-I

Case-8	765 kV BH-II - SK-II - ckt-I
Case-9	400 kV SG - BK - ckt-I
Case-10	400 kV BH-RS - BK-RS - ckt-I
Case-11	400 kV BK-PG - BK-II ckt-1

Grid Strength Assessment and Planning Tool – All India Results (SCRIF)

Results SCRIF
Case-3: 300 MVAR STATCOM at BK-II in 'Voltage Control' Mode

Adaptive 'Q' Injection for 'IF' matrix computation

Bus Number	Station Name	Voltage KV	Installed Capacity	Base Fault Level (MVA)	Base SCRIF	Case-1 SCRIF	Case-2 SCRIF	Case-3 SCRIF	Case-4 SCRIF	Case-5 SCRIF	Case-6 SCRIF	Case-7 SCRIF	Case-8 SCRIF	Case-9 SCRIF	Case-10 SCRIF	Case-11 SCRIF
132193	F-IIA	220	2490	12295	1.16	1.25	1.26	1.16	1.14	1.26	1.25	1.22	1.26	1.15	1.25	1.16
132220	F-IIB	220	1370	9958	0.98	1.06	1.08	0.98	0.97	1.08	1.07	1.04	1.07	0.98	1.07	0.98
134052	F-II	400	2606	12684	1.18	1.27	1.28	1.18	1.16	1.28	1.27	1.24	1.28	1.17	1.28	1.18
132226	F-III	220	2659	10420	1.42	1.51	1.52	1.42	1.41	1.53	1.52	1.49	1.52	1.42	1.52	1.43
132174	BH-PG	220	3580	14979	1.32	1.44	1.46	1.33	1.29	1.49	1.49	1.43	1.47	1.32	1.42	1.33
132210	BH-IIA	220	2230	11562	0.88	0.95	0.96	0.87	0.87	0.97	0.97	0.92	0.95	0.87	0.95	0.88
132225	BH-IIB	220	1065	8343	0.73	0.80	0.81	0.74	0.73	0.83	0.83	0.79	0.81	0.73	0.81	0.74
134063	BH-IIA	400	4395	26099	2.41	2.62	2.67	2.38	2.38	2.74	2.73	2.51	2.66	2.40	2.63	2.42
132194	BK-PG	220	935	7892	0.83	1.10	1.12	0.83	0.84	1.15	1.15	1.12	1.14	0.83	1.14	0.79
134042	BK-PG	400	3575	23070	2.73	3.67	3.79	2.68	2.72	3.96	3.95	3.81	3.90	2.73	3.89	2.56
132230	BK-II	220	2985	11332	1.64	3.75	3.76	1.62	1.63	3.79	3.79	3.78	3.79	1.64	3.79	1.44
134059	BK-II	400	3873	17031	4.40	4.33	4.34	4.32	4.35	4.39	4.40	4.36	4.39	4.40	4.39	3.64

Sheet Name: SCRIF

Case-1	765 kV BK - KH - ckt-I
Case-2	765 kV BK - MG - ckt-I
Case-3	765 kV BH-II - BK - ckt-I
Case-4	765 kV BH - BK - ckt-I
Case-5	765 kV BH - F-II - ckt-I
Case-6	765 kV BH-II - F-II - ckt-I
Case-7	765 kV BH-II - AJ - ckt-I

Case-8	765 kV BH-II - SK-II - ckt-I
Case-9	400 kV SG - BK - ckt-I
Case-10	400 kV BH-RS - BK-RS - ckt-I
Case-11	400 kV BK-PG - BK-II ckt-1

Grid Strength Assessment and Planning Tool – All India Results (SCRIF)

Results Comparison (SCRIF) – Impact of Switching on 300 MVAR STATCOM at BK-II

Station	Bus Voltage (kV)	Base Case SCR-IF Values		
		Case-1: Fixed 'Q' Perturbation + 300 MVAR STATCOM at BK-II in Fixed 'Q' mode	Case-2: Fixed 'Q' Perturbation + 300 MVAR STATCOM at BK-II in Voltage Control Mode	Case-3: Adaptive 'Q' Perturbation + 300 MVAR STATCOM at BK-II in Voltage Control Mode
F-IIA	220	1.08	1.28	1.16
F-IIB	220	0.91	1.09	0.98
F-II	400	1.10	1.30	1.18
F-III	220	1.35	1.54	1.42
BH-PG	220	1.23	1.48	1.32
BH-IIA	220	0.83	0.97	0.88
BH-IIB	220	0.69	0.82	0.73
BH-IIA	400	2.24	2.72	2.41
BK-PG	220	0.62	1.15	0.83
BK-PG	400	1.99	3.94	2.73
BK-II	220	0.74	3.79	1.64
BK-II	400	1.41	4.40	4.40

Input File Formats – SynCON Placement

Input File Format: Candidate Machines

Candidate	Candidate Bus	Cost	MBASE_MVA	QMAX_MVAr	QMIN_MVAr	Xsource_pu	MachID
SC01	132193	1	350	300	-300	0.25	Y1
SC02	132220	1	350	300	-300	0.25	Y1
SC03	134052	1	350	300	-300	0.25	Y1
SC04	132226	1	350	300	-300	0.25	Y1
SC05	132174	1	350	300	-300	0.25	Y1
SC06	132210	1	350	300	-300	0.25	Y1
SC07	132225	1	350	300	-300	0.25	Y1
SC08	134063	1	350	300	-300	0.25	Y1
SC09	132194	1	350	300	-300	0.25	Y1
SC10	134042	1	350	300	-300	0.25	Y1
SC11	132230	1	350	300	-300	0.25	Y1
SC12	134059	1	350	300	-300	0.25	Y1

Sheet Name: SynCon

- Input file format for Bus Data is same as SCR module.
- Candidate SynCons / GFM devices are defined in the SynCon sheet of the same input Excel file. Each row is one candidate bus with user specified parameters.

Grid Strength Assessment and Planning Tool – All India Results (SynCON Placement)

Results for Optimal SynCON Placement for minimum SCR Target of '4' at all RE Pooling Buses

10/12	2/12	2	12/12	69.54
buses passing SCR Criteria before optimization	SynCons selected	portfolio cost	buses passing SCR Criteria after validation	global benefit

Final Selected Candidates

	Candidate	Bus | Station Name	MBASE (MVA) | Qmax (MVAr) | Qmin (MVAr) | Xs (pu) | Cost
C1	SC11	132230 – BK-II	350 MVA | Qmax=300 | Qmin=-300 | Xs=0.250 | Cost=1.0
C2	SC04	132226 – F-III	350 MVA | Qmax=300 | Qmin=-300 | Xs=0.250 | Cost=1.0

SCR IMPROVEMENT AFTER SYNCON (Base → With SynCon)		
Bus Number	**Station Name**	**Base SCR → With-SynCon SCR | Change | Status**
132193	F-IIA	4.938 → 5.037 | +0.099 | ✓ PASS
132220	F-IIB	7.269 → 7.387 | +0.118 | ✓ PASS
134052	F-II	4.867 → 4.974 | +0.107 | ✓ PASS
132226	F-III	3.919 → 4.450 | +0.532 | ✓ PASS
132174	BH-PG	4.184 → 4.221 | +0.037 | ✓ PASS
132210	BH-IIA	5.185 → 5.221 | +0.036 | ✓ PASS
132225	BH-IIB	7.834 → 7.873 | +0.039 | ✓ PASS
134063	BH-IIA	5.938 → 6.038 | +0.100 | ✓ PASS
132194	BK-PG	8.440 → 8.565 | +0.125 | ✓ PASS
134042	BK-PG	6.453 → 6.743 | +0.289 | ✓ PASS
132230	BK-II	3.796 → 4.271 | +0.474 | ✓ PASS
134059	BK-II	4.397 → 4.755 | +0.358 | ✓ PASS

Final Selection Rule

Pick the lowest total cost. If tied: fewer units. If still tied: higher global benefit.

Grid Strength Assessment and Planning Tool – All India Results (SynCON Placement)

Results for Optimal SynCON Placement for minimum SCR Target of '5' at all RE Pooling Buses

6/12	8/24	8	12/12	75.09
buses passing SCR Criteria before optimization	SynCons selected	portfolio cost	buses passing SCR Criteria after validation	global benefit

Final Selected Candidates

	Candidate	Bus | Station Name	MBASE (MVA) | Qmax (MVAr) | Qmin (MVAr) | Xs (pu) | Cost
C1	SC11	132230 – BK-II	350 MVA | Qmax=300 | Qmin=-300 | Xs=0.250 | Cost=1.0
C2	SC23	132230 – BK-II	350 MVA | Qmax=300 | Qmin=-300 | Xs=0.250 | Cost=1.0
C3	SC04	132226 – F-III	350 MVA | Qmax=300 | Qmin=-300 | Xs=0.250 | Cost=1.0
C4	SC16	132226 – F-III	350 MVA | Qmax=300 | Qmin=-300 | Xs=0.250 | Cost=1.0
C5	SC12	134059 – BK-II	350 MVA | Qmax=300 | Qmin=-300 | Xs=0.250 | Cost=1.0
C6	SC24	134059 – BK-II	350 MVA | Qmax=300 | Qmin=-300 | Xs=0.250 | Cost=1.0
C7	SC05	132174 – BH PG	350 MVA | Qmax=300 | Qmin=-300 | Xs=0.250 | Cost=1.0
C8	SC17	132174 – BH PG	350 MVA | Qmax=300 | Qmin=-300 | Xs=0.250 | Cost=1.0

Final Selection Rule

Pick the lowest total cost. If tied: fewer units. If still tied: higher global benefit.

Grid Strength Assessment and Planning Tool – All India Results (SynCON Placement)

Results for Optimal SynCON Placement for minimum SCR Target of '5' at all RE Pooling Buses

SCR IMPROVEMENT AFTER SYNCON (Base → With SynCon)		
Bus Number	**Station Name**	**Base SCR → With-SynCon SCR | Change | Status**
132193	F-IIA	4.938 → 5.181 | +0.243 | ✓ PASS
132220	F-IIB	7.269 → 7.556 | +0.287 | ✓ PASS
134052	F-II	4.867 → 5.129 | +0.262 | ✓ PASS
132226	F-III	3.919 → 5.017 | +1.099 | ✓ PASS
132174	BH-PG	4.184 → 5.054 | +0.870 | ✓ PASS
132210	BH-IIA	5.185 → 5.348 | +0.163 | ✓ PASS
132225	BH-IIB	7.834 → 8.010 | +0.176 | ✓ PASS
134063	BH-IIA	5.938 → 6.405 | +0.467 | ✓ PASS
132194	BK-PG	8.440 → 8.872 | +0.432 | ✓ PASS
134042	BK-PG	6.453 → 7.530 | +1.076 | ✓ PASS
132230	BK-II	3.796 → 5.152 | +1.356 | ✓ PASS
134059	BK-II	4.397 → 5.839 | +1.442 | ✓ PASS

Similar optimization may also be applied to GFM in place of SynCON, or to a hybrid SynCON + GFM approach with different combinations of costs and size

Grid Strength Assessment and Planning Tool – All India Results (SynCON Placement)

Results for SynCON Optimization for minimum SCR Target of '5' at all RE Pooling Buses of Rajasthan

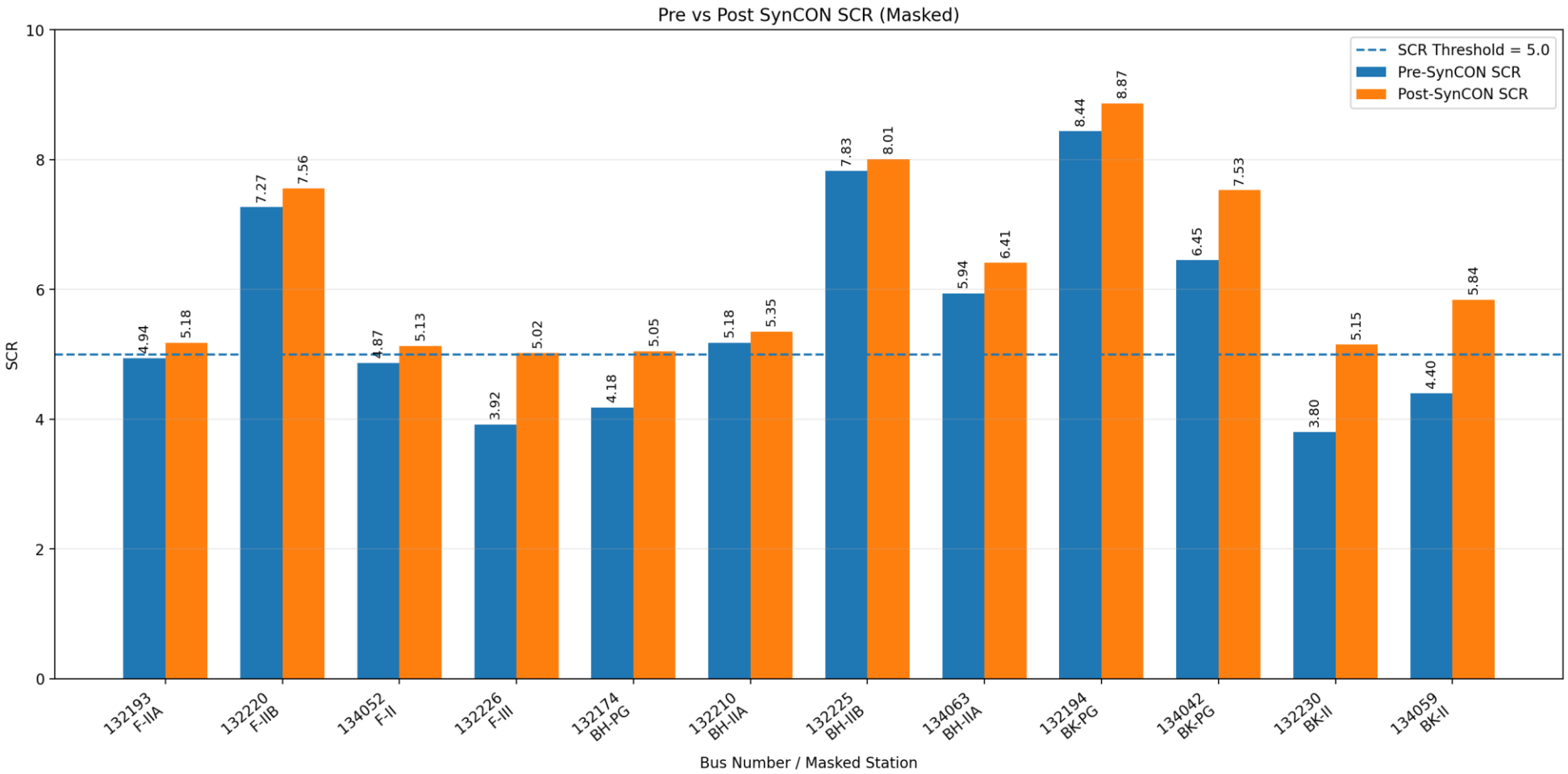

Similar optimization may also be applied to GFM in place of SynCON, or to a hybrid SynCON + GFM approach with different combinations of costs and size

References

1. IEEE Std 2800-2022 - IEEE Standard for Interconnection and Interoperability of Inverter-Based Resources (IBRs) Interconnecting with Associated Transmission Electric Power Systems
https://ieeexplore.ieee.org/stamp/stamp.jsp?tp=&arnumber=9762253

2. NERC - Integrating Inverter Based Resources into Low Short Circuit Strength Systems Reliability Guideline, Dec 2017
https://www.nerc.com/comm/RSTC_Reliability_Guidelines/Item_4a._Integrating%20_Inverter-Based_Resources_into_Low_Short_Circuit_Strength_Systems_-_2017-11-08-FINAL.pdf

3. CIGRETB 671 - Connection of wind farms to weak AC networks

4. National Grid ESO - Provision of Short Circuit Level Data
https://www.nationalgrideso.com/document/238741/download

5. NERC - Short-Circuit Modeling and System Strength White Paper, February 2018
https://www.nerc.com/pa/RAPA/ra/Reliability%20Assessments%20DL/Short_Circuit_whitepaper_Final_1_26_18.pdf

6. AEMO: System strength in the NEM
https://aemo.com.au/-/media/files/electricity/nem/system-strength-explained.pdf

7. Sharma, Pranav & Shah, Shahil. (2025). Application of the Extra Element Theorem for Grid Strength Analysis in IBR-Dominated Systems. 1-5. 10.1109/PESGM52009.2025.11225841.

Thank you !!

Priyam Jain
Chief Manager (System Studies)
NLDC, GRID-INDIA
Email: priyam.jain@grid-india.in
priyamjain123@gmail.com